PL22 SERIES

COMMON MODE INDUCTOR

VERTICAL MOUNTING

AS9100 D CERTIFIED
ISO 9001 CERTIFIED
ITAR COMPLIANT

RoHS VERSION AVAILABLE

COTS +

Inductance Range (mH)	DCR (mOhms)	Current Rating (Amps)
1 to 16	20 to 240	1.8 to 7.5

ELECTRICAL SPECIFICATIONS

- **Operating Temperature:** −40°C to +125°C
- **Storage Temperature:** −40°C to +125°C
- **Temperature Rise @ 100°C:** < 25°C
- **Dielectric Withstanding Voltage:** 1250 V_{RMS} MINIMUM
- **Different electrical values available upon request**

FEATURES

- **Compact**, low profile, ideal for automatic placement
- **Terminations:** Tin-lead
- **Magnetically shielded**
- **Other termination finishes available**
- **Order** to VE part number

MARKINGS: LASER ETCH OR INK

SCHEMATIC

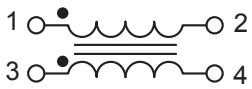

Vanguard P/N	Inductance ±30% (mH)	Rated Current RMS (Amps)	DCR max (mOhms)	Lead Size AWG	Package Size
PL22-01	1	6.0	20	19	B441
PL22-02	2	7.5	22	18	B442
PL22-03	3	3.5	60	20	B441
PL22-04	4	5.2	40	19	B442
PL22-05	8	3.2	120	18	B442
PL22-06	10	1.8	240	20	B441
PL22-07	16	2.6	160	18	B442

PACKAGE B441

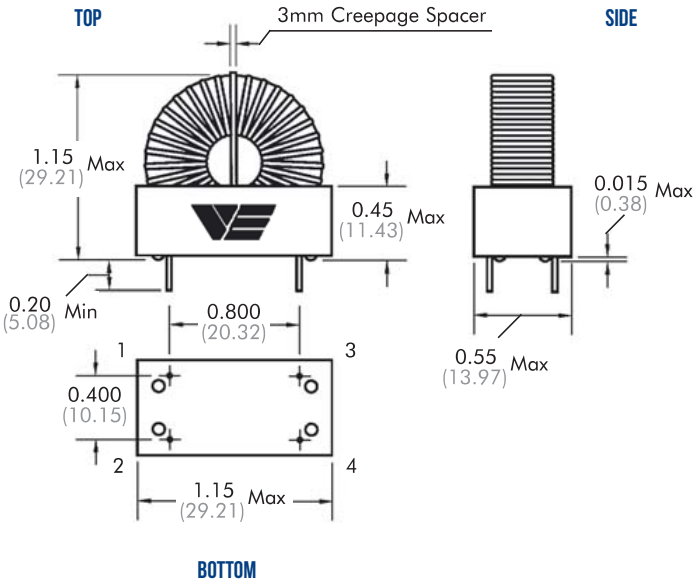

PACKAGE B442

Inches
(Millimeters)

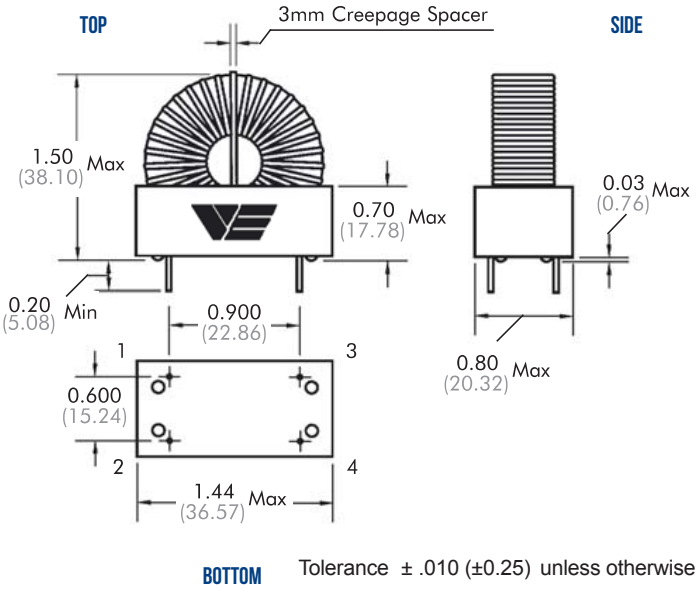

Tolerance ± .010 (±0.25) unless otherwise stated

CUSTOM DESIGNS & MODIFICATIONS:

Other electrical configurations and performance characteristics are available in various sizes and package types

PL22 SERIES COTS+

REV D